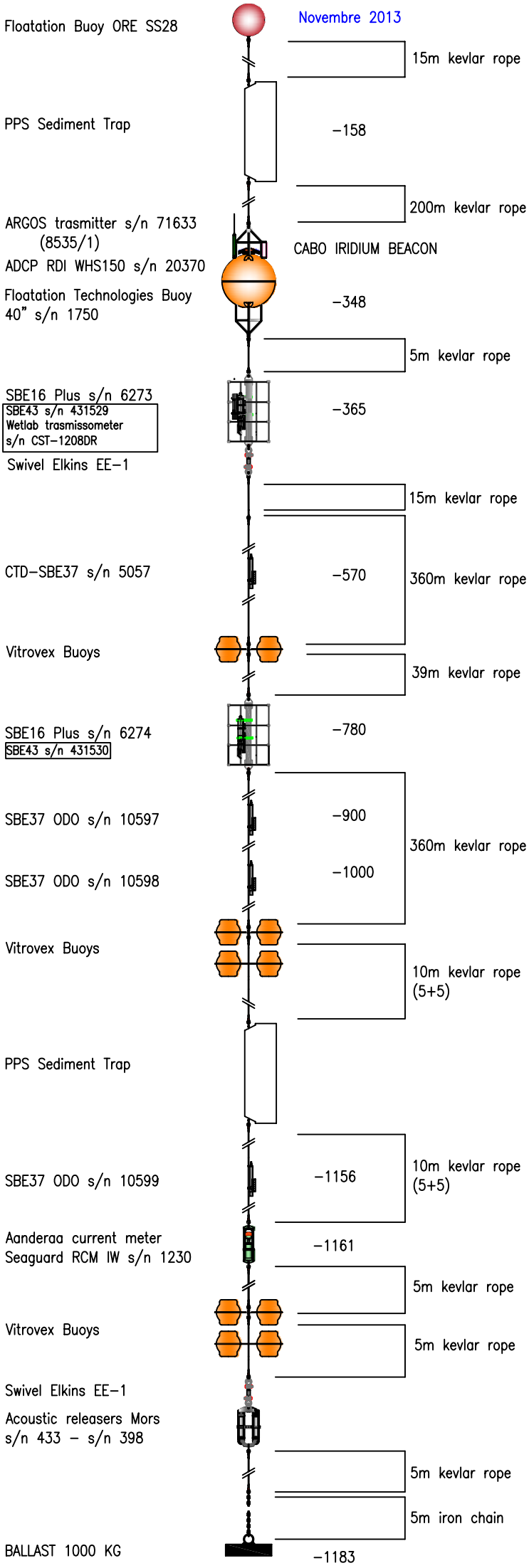
Novembre 2013
Floatation Buoy ORE SS28
15m kevlar rope
PPS Sediment Trap
-158
200m kevlar rope
ARGOS trasmitter s/n 71633
(8535/1)
CABO IRIDIUM BEACON
ADCP RDI WHS150 s/n 20370
Floatation Technologies Buoy
40" s/n 1750
-348
5m kevlar rope
SBE16 Plus s/n 6273
SBE43 s/n 431529
Wetlab trasmissometer
s/n CST-1208DR
-365
Swivel Elkins EE-1
15m kevlar rope
CTD-SBE37 s/n 5057
-570
360m kevlar rope
Vitrovex Buoys
39m kevlar rope
SBE16 Plus s/n 6274
SBE43 s/n 431530
-780
SBE37 ODO s/n 10597
-900
360m kevlar rope
SBE37 ODO s/n 10598
-1000
Vitrovex Buoys
10m kevlar rope
(5+5)
PPS Sediment Trap
SBE37 ODO s/n 10599
-1156
10m kevlar rope
(5+5)
Aanderaa current meter
Seaguard RCM IW s/n 1230
-1161
5m kevlar rope
Vitrovex Buoys
5m kevlar rope
Swivel Elkins EE-1
Acoustic releasers Mors
s/n 433 - s/n 398
5m kevlar rope
5m iron chain
BALLAST 1000 KG
-1183